VALID FOR VERSIONS WITH: S&S

Removing (Refitting)

- Position the vehicle on a lift.

Op. 2125C24 GEAR ENGAGEMENT/SELECTION CABLES - R.R

Op. 2125C02 GEAR CONTROL LEVER OUTER GAITER R R

Op. 2125C18 REVERSE INHIBITOR ON LEVER SUPPORT- REPLACE, INCLUDES R.R. GRIP

VALID FOR VERSIONS WITH: S&S

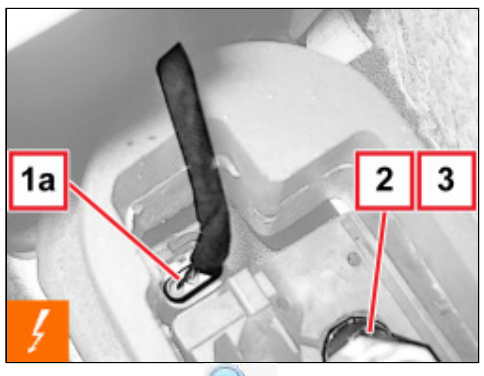

1. Working at the base of the gear control lever, disconnect the electrical connection (1a) for the gear lever sensor in neutral sensor.

	Description	Connector
1a	GEAR LEVER NEUTRAL POSITION SENSOR	See K214 neutral position sensor on gear lever

2. Position the gear lever in neutral.

3. Suitably protect the gear lever.

VALID FOR VERSIONS WITH: S&S

- Raise the vehicle.

Op. 1076B30 FRONT EXHAUST SILENCER - R + R

Op. 1076A42 FRONT EXHAUST SILENCER FRONT HEAT SHILED R R

VALID FOR VERSIONS WITH: S&S

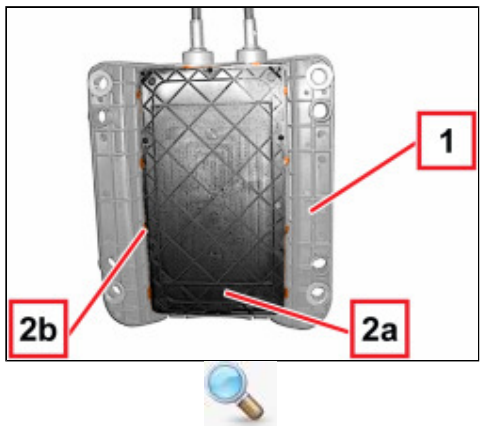

1. Lower the gear lever mounting.

2. Remove the cover (2a) releasing the contour retainers (2b).

VALID FOR VERSIONS WITH: S&S

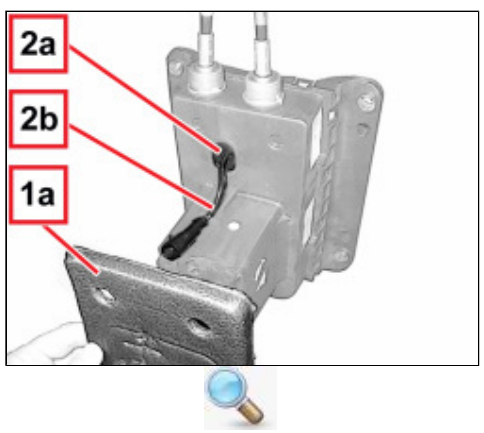

1. Working on the upper side of the gear lever mounting, move the sound insulation panel (1a).

2. Release the bulkhead rubber fitting (2a) from the wiring (2b).

VALID FOR VERSIONS WITH: S&S

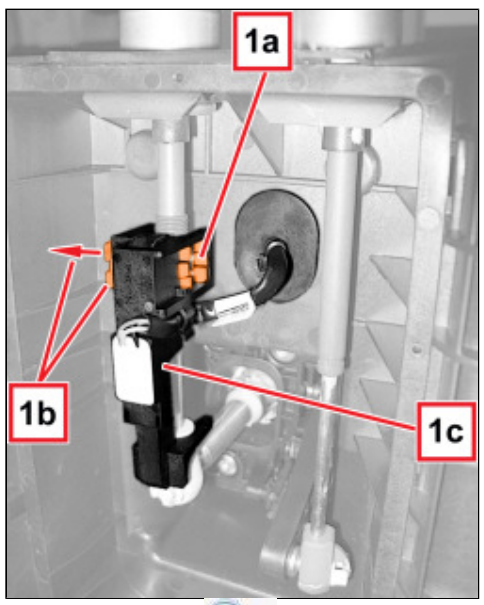

1. Release the terminal retainers (1a) and take out the retainer (1b) for the gear lever in neutral sensor (1c).

VALID FOR VERSIONS WITH: S&S

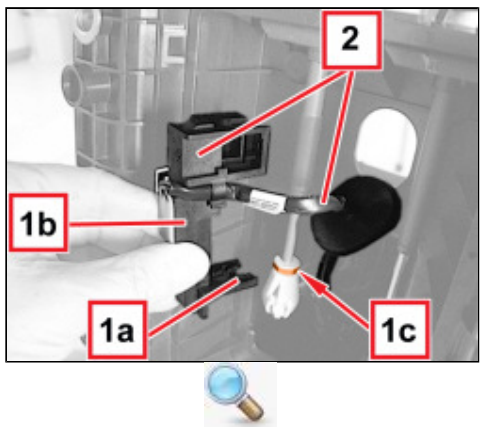

1. Release the fork (1a) of the gear lever in neutral sensor (1b) from the housing (1c) for the gear control rod.

2. Retain the gear lever in neutral sensor with wiring.

Once disassembled, the gear lever in neutral sensor (1b) cannot be used anymore. Therefore, during refitting, it must be replaced with a new one supplied by Spare Parts.

VALID FOR VERSIONS WITH: S&S

Refitting (Removing)

- Check that the new gear lever in neutral sensor is not damaged.

- Check that the gear lever is in neutral.

VALID FOR VERSIONS WITH: S&S

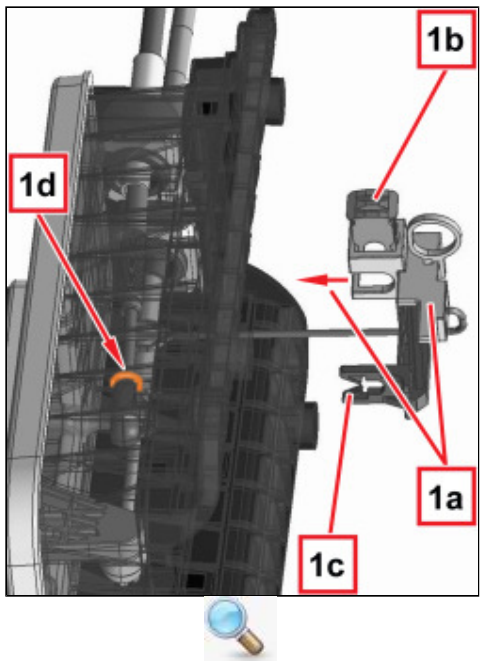

1. Engage the new sensor (1a) in its housing with the retainer (1b) in open position (as shown). Engage the fork (1c) in the housing (1d) for the gear control rod.

VALID FOR VERSIONS WITH: S&S

1. Engage the retainer (1a) for the sensor (1b) in position and engage the terminal retainers.

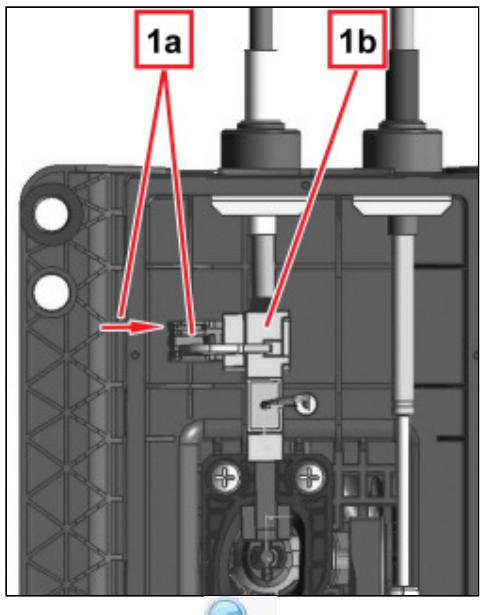

VALID FOR VERSIONS WITH: S&S

1. Take the position ring (1a) out from the sensor (1b).

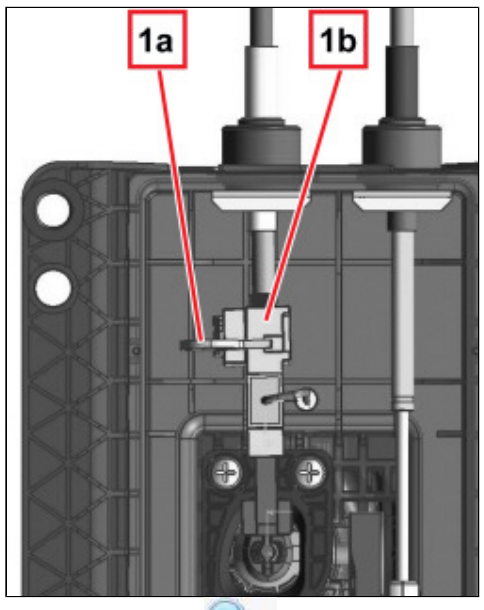

VALID FOR VERSIONS WITH: S&S

1. Position the wiring (1a) and engage the bulkhead rubber fitting (1b).

2. Position the sound insulation panel.

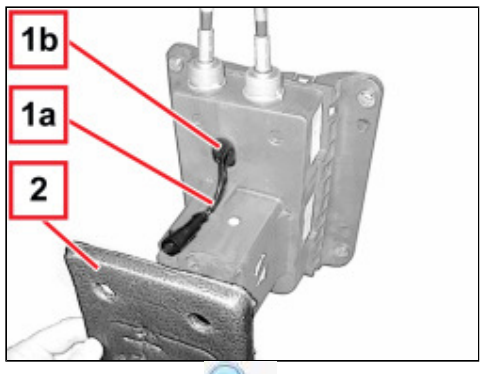

VALID FOR VERSIONS WITH: S&S

- Apply the lid to the gear control lever mounting and engage the contour retainers.

- Position the gear lever mounting.

Op. 1076A42 FRONT EXHAUST SILENCER FRONT HEAT SHILED R R

Op. 1076B30 FRONT EXHAUST SILENCER - R + R

- Lower the vehicle.

- Working at the base of the gear control lever, connect the electrical connection for the gear lever in neutral sensor.

Op. 2125C18 REVERSE INHIBITOR ON LEVER SUPPORT- REPLACE, INCLUDES R.R. GRIP

Op. 2125C02 GEAR CONTROL LEVER OUTER GAITER R R

Op. 2125C24 GEAR ENGAGEMENT/SELECTION CABLES - R.R

- Remove the vehicle from the lift.

After the refitting operation, carry out the sensor self-learning procedure using Examiner. This operation is carried out each time there may be movements between the lever and the sensor or when the sensor is replaced.